RoHS Compliant

THIS DRAWING CONTAINS INFORMATION THAT IS PROPRIETARY TO ZDT TECHNOLOGY. AND SHOULD NOT BE USED WITHOUT WRITTEN PERMISSION

REV	ECN No.	DATE	REMARK
A	NEW	2017.03.21	NEW RELEASE
B	ECN1706005	2017.06.08	底部加胶0.15
C	ECN1707018	2017.07.24	端子SMT面增加0~0.2mm尺寸管控
D	ECN1908008	2019.08.24	变更新图号,变更盖子
E	ECR202005016	2020.05.27	提升制程良率，优化塑胶MOLDING结构
F	ECR2011007	2020.11.20	端子脚长1.57改为1.83

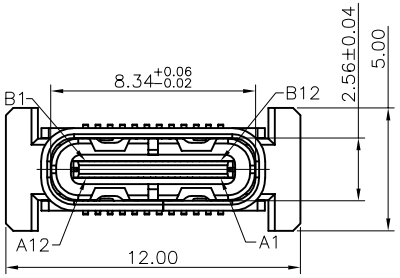

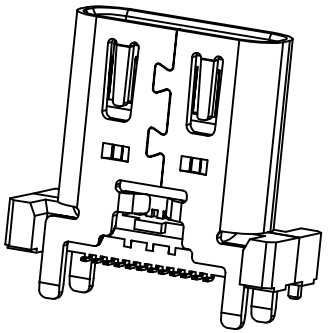

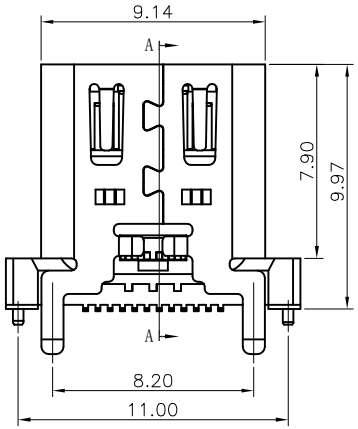

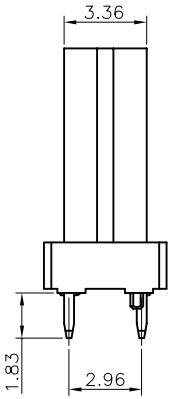

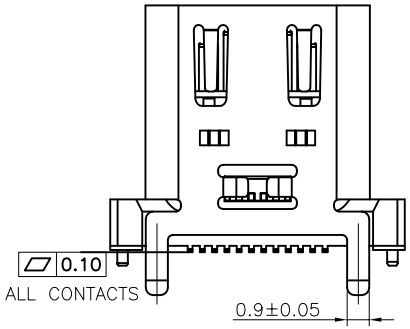

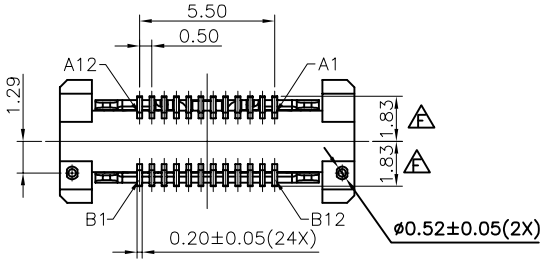

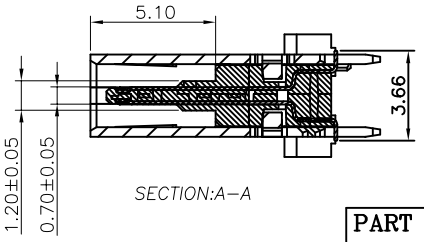

NOTE:
1.MATERIAL SPECIFICATION:
1.HOUSING:PA9T ,UL94 V−0.
2.TERMINAL: COPPER ALLOY
3.MID PLATE: STAINLESS STEEL(SUS301)
4.FRONT SHELL: STAINLESS STEEL(SUS304)
2.PLATING SPECIFICATION:
2−1.TERMINAL:
Ni 50u" MIN. UNDER PLATED OVER ALL.
Au PLATED ON THE FUNCTIONAL AREA OF CONTACT.
(GOLD PLATING THICKNESS FOLLOW THE P/N)
PLATING SPECIFICATIONS OF THE SOLDER AREA FOLLOW THE P/N
2−2.SHELL:
Ni 50u" MIN. UNDER PLATED OVER ALL.
2−3.MID PLATE:
CLEAR ONLY
3.MECHANICAL PERFORMANCE,
3−1.INSERTION FORCE: 0.5~2.0kgf.
3−2.REMOVAL FORCE: 0.8kgf~2.0kgf.
3−3.DURABILITY: 10000 CYCLES.
4.ELECTRICAL PERFORMANCE,
4−1. VOLTAGE RATING:5 V DC/AC (RMS. max)
CURRENT RATING:5 AMPS. FOR TOTAL VBUS/GND PINS;
1.25AMPS FOR CC PIN,0.25 AMPS. FOR ALL OTHER CONTACT.
4−2. LLCR:
VBUS & GND PINS AND OTHER PINS: 40mΩ/PIN MAX.
SHIELD: 50mΩ/MAX.
LLCR MAX. CHANGE OF ALL PINS: 10mΩ.
4−3.INSULATION RESISTANCE: 100MΩ MIN
4−4.DIELECTRIC WITHSTAND VOLTAGE,AC 100V FOR 1 MINUTE.
5. ENVIRONMENTAL PERFORMANCE:
OPERATING TEMPERATURE: −25°C~+85°C.
6.IR REFLOW:
THE PEAK TEMPERATURE ON THE BOARD SHALL
BE MAINTAINED FOR 10 SECONDS AT 260°C.

7. PART NUMBER CODE:

Z−CF036 S L X XX R − C − 01
(1) (2)

(1) HOUSING COLOR:
B:BLACK
N:Natural

(2) CONTACTS PLATED:
12:接触镀金3u"焊接区域镀金1u"
15:接触镀金30u"焊接区域镀金1u"

PART NO.:
SEE THE PART NUMBER CODE

GENERAL TOLERANCES (UNLESS SPECIFIED)	
x.xxxx	± ---
x.xxx	± 0.10
x.xx	± 0.25
x.x	± 0.30
ANGULAR	± --°

QUALITY SYMBOL

深圳市中科兴达科技有限公司
SHENZHEN ZDT TECHNOLOGY CO., LTD

TITLE: USB C F 直立式四脚插板 CONN.

DWG.NO.: CF036-01

SHEET NO.: 1 OF 2

DIMENSION STYLE: MM ONLY

DESIGN UNITS: METRIC

SCALE: 1:1

DRAWN BY	DATE
SAM	2020.11.20
CHECKED BY	DATE
JAY	2020.11.20
APPROVED BY	DATE
JACKY	2020.11.20

THIRD ANGLE PROJECTION

frame size: A4

RoHS Compliant

THIS DRAWING CONTAINS INFORMATION THAT IS PROPRIETARY TO ZDT TECHNOLOGY. AND SHOULD NOT BE USED WITHOUT WRITTEN PERMISSION

REV	ECN No.	DATE	REMARK
A	NEW	2017.03.21	NEW RELEASE
B	ECN1706005	2017.06.08	底部加胶0.15
C	ECN1707018	2017.07.24	端子SMT面增加0~0.2mm尺寸管控
D	ECN1908008	2019.08.24	变更新图号,变更盖子
E	ECR202005016	2020.05.27	提升制程良率，优化塑胶MOLDING结构
F	ECR2011007	2020.11.20	端子脚长1.57改为1.83

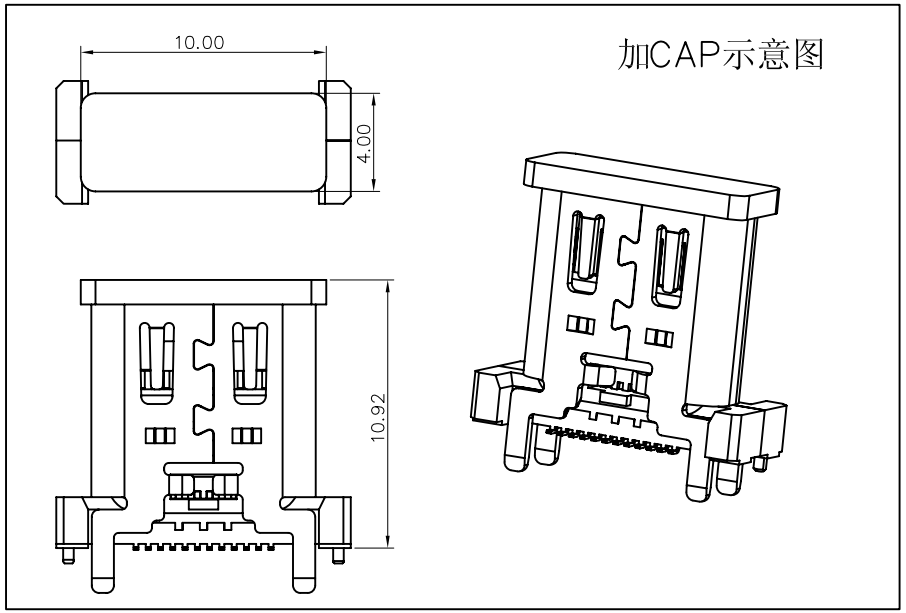

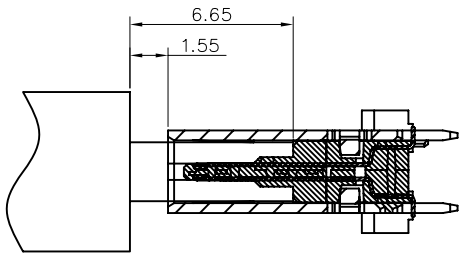

AFTER MATING

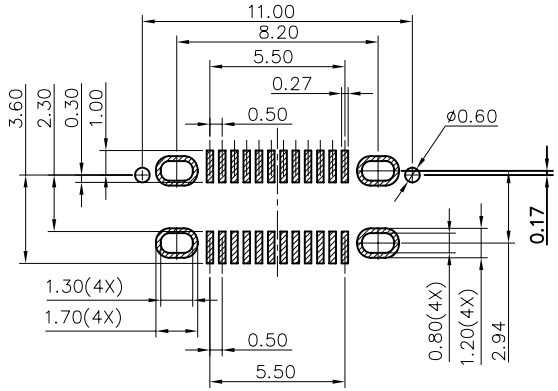

RECOMMENDED PCB LAYOUT(TOP VIEW)
THICKNESS 1.0±0.10MM;DEFAULT TOLERANCE:±0.05

USB TYPE-C PIN ASSIGNMENTS

PIN NUMBER	SIGNAL NAME	PIN NUMBER	SIGNAL NAME
A1	GND	B12	GND
A2	SSTXp1	B11	SSRXp1
A3	SSTXn1	B10	SSRXn1
A4	VBUS	B9	VBUS
A5	CC1	B8	SBU2
A6	Dp1	B7	Dn2
A7	Dn1	B6	Dp2
A8	SBU1	B5	CC2
A9	VBUS	B4	VBUS
A10	SSRXn2	B3	SSTXn2
A11	SSRXp2	B2	SSTXp2
A12	GND	B1	GND

PART NO.:
SEE THE PART NUMBER CODE

QUALITY SYMBOL

GENERAL TOLERANCES (UNLESS SPECIFIED)	
x.xxxx	± ---
x.xxx	± 0.10
x.xx	± 0.25
x.x	± 0.30
ANGULAR	± --°

ZDT 深圳市中科兴达科技有限公司
SHENZHEN ZDT TECHNOLOGY CO., LTD

TITLE: USB C F 直立式四脚插板 CONN.

DWG.NO.: CF036-01

SHEET NO.: 2 OF 2

DIMENSION STYLE: MM ONLY

DESIGN UNITS: METRIC

SCALE: 1:1

DRAWN BY	SAM	DATE 2020.11.20
CHECKED BY	JAY	DATE 2020.11.20
APPROVED BY	JACKY	DATE 2020.11.20

THIRD ANGLE PROJECTION

frame size: A4